SNO-WAY®

SNOW & ICE CONTROL EQUIPMENT

ASSEMBLY & INSTALLATION INSTRUCTIONS

VEHICLE MOUNT KIT 99101272
FOR UTV SERIES PLOW

TO FIT
2007 & Later - Cub Cadet Volunteer

©2016 Sno-Way® International

97102033A

1. THINK SAFETY, ALWAYS WEAR SAFETY GLASSES WHEN PERFORMING THE OPERATIONS PRESCRIBED IN THESE INSTRUCTIONS

2. READ ALL INSTRUCTIONS CAREFULLY BEFORE ATTEMPTING INSTALLATION

3. BEFORE BEGINNING WORK MAKE SURE TO SET PARKING BRAKE AND CHOCK

ASSEMBLY TOOLS

Drill Bits	1/4" - 5/8"
Impact Sockets	7/16" - 1-3/8"
Wrenches	7/16" - 1-3/8"
Torque Wrench	
Rat Tail Pry Bar	
Center Punch and Hammer	
C-Clamp	

INSTALLATION NOTES

1. Vehicle should be parked on a level surface with a normal vehicle load on the FRONT suspension.

2. On some vehicles it may be necessary to raise or stiffen the suspension to decrease the vehicles front suspension sag with the snow plow in place.

3. Unless otherwise specified, mount all Vehicle Mount Kit Components to vehicle before tightening any hardware.

4. It is recommended that LOCTITE®, or similar thread locking product, be used on ALL mounting hardware (i.e. Nuts, Cap Screws, Bolts, etc.).

5. Items in parentheses () refer to quantity required for this step. Items in parentheses with a pound sign (#) indicate the part number as found in the parts list on the

MOUNTING INSTRUCTIONS

1. The lower driver side corner of the brush guard is secured to the UTV frame with two fasteners. Remove the two from the inside, but leave the bolts in place. (See Figure 1.)

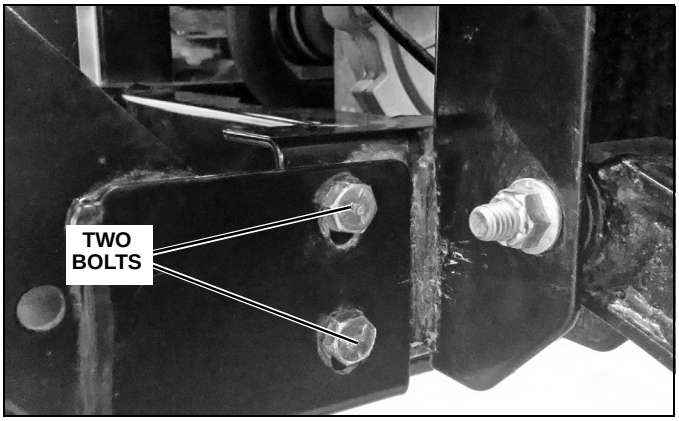

Figure 1

2. Slide the Driver Side Bracing Weldment (#2) behind the brush guard and place it against the inside of the brush guard while also aligning the two bolts through the holes in the Driver Side Bracing Weldment. (See Figure 2.)

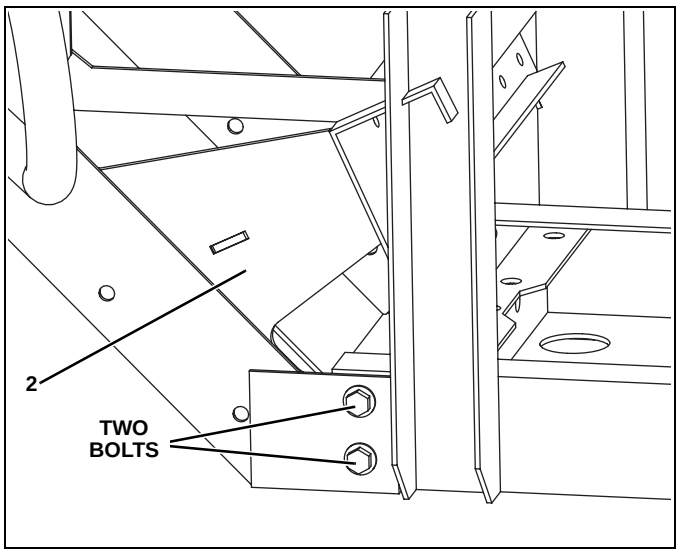

Figure 2

3. While the bolts are aligned through the holes, item #2 is flat against the side of the brush guard, and item #2 is also tight against the upper UTV frame rail; mark the center of all the holes: Four in the brush guard and 2 in the upper UTV frame rail. (See Figure 3.)

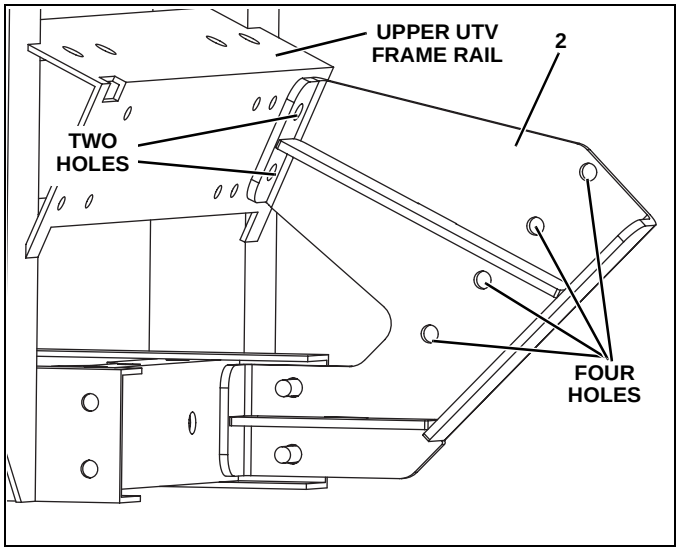

Figure 3

4. Remove the Bracing Weldment and tighten the nuts back on that we removed in step 1.

5. Repeat steps 1 through 3 for the Passenger Side Bracing Weldment (#3).

6. Take off the brush guard by removing the remaining hardware attaching it to the UTV. Four on the bottom and two on top. (See Figure 4.)

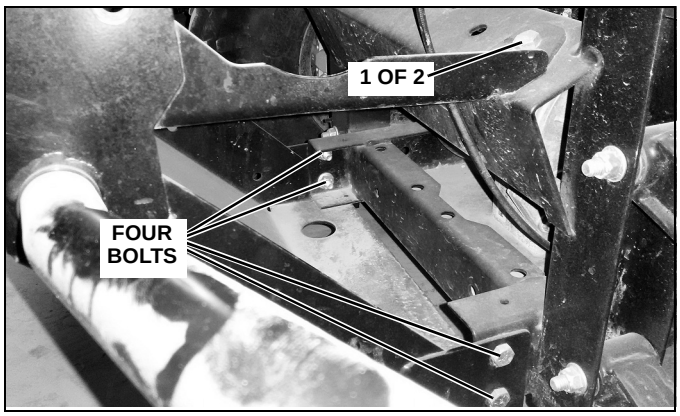

Figure 4

7. Center punch and drill ¼" pilot holes in all marked hole locations: Eight in the brush guard and four in the upper UTV frame rail.

8. Drill the eight brush guard holes to 5/8" and the four upper UTV frame rail holes to 17/32".

9. Deburr the holes and use some touchup paint to prevent corrosion.

10. Loosely secure the Driver Side Bracing Weldment (#2) to the upper UTV frame rail with (2) 3/8"-16 x 1" Cap Screws (#6), (2) 3/8" Flat Washers (#8), and (2) 3/8"-16 Nylock Nuts (#9). Repeat for the Passenger Side Bracing Weldment (#3). (See Figure 5.)

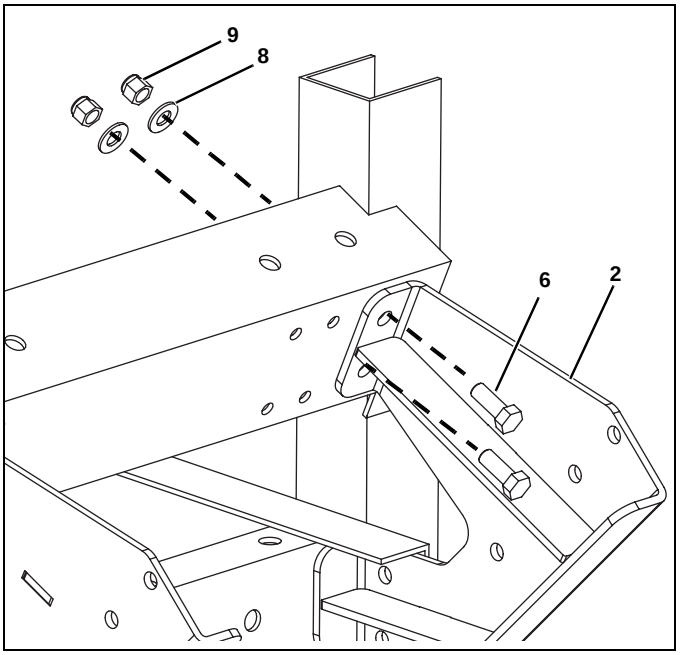

Figure 5

11. Mount the brush guard back into place, but use (4) 3/8"-16 x 1-1/4" Cap Screws (#6), (4) 3/8" Flat Washers (#8), and (4) 3/8"-16 Nylock Nuts (#9) for mounting the lower end of the brush guard. (See Figure 6.)

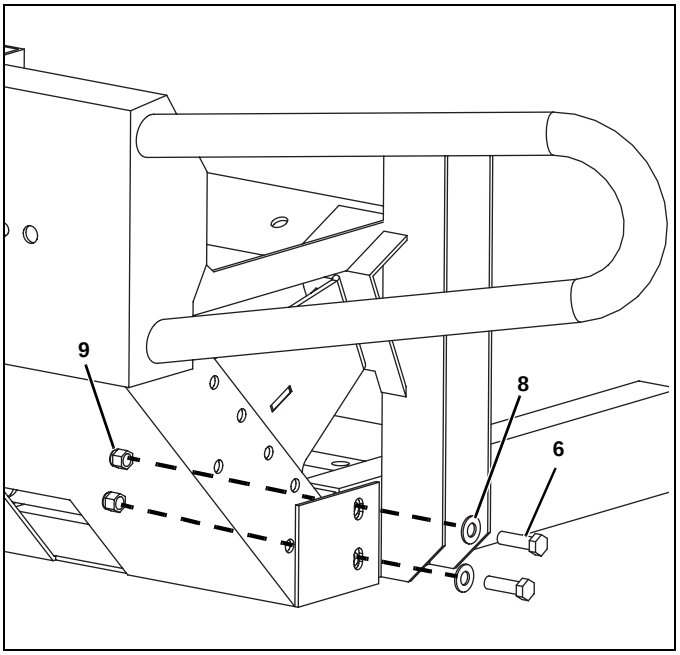

Figure 6

12. Install the Driver Side Mounting Bracket (#4) and Passenger Side Mounting Bracket (#5) on their respective sides with (8) 3/8”-16 x 1-1/4” Cap Screws (#6) and (8) 3/8”-16 Nylock Nuts (#9). Four on each side. (See Figure 7.)

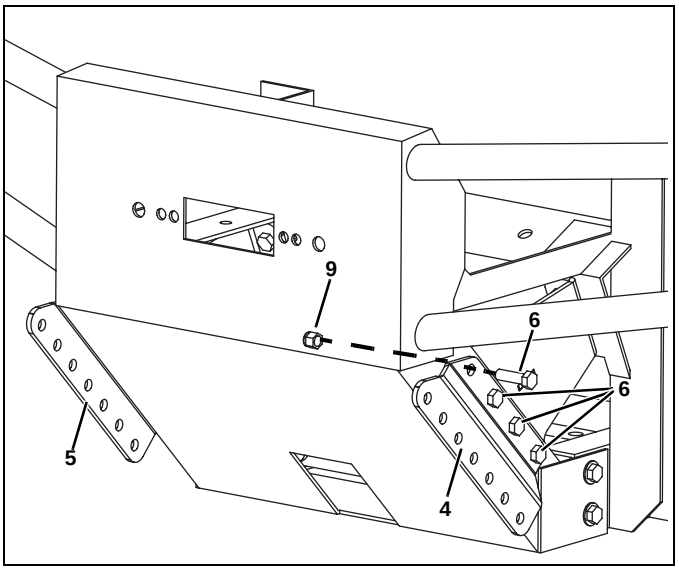

Figure 7

13. Attach the UTV Mount (#1) to the Driver and Passenger Mounting Brackets (#4 & 5) with (6) 3/8”-16 x 1” Cap Screws (#6) and (6) 3/8”-16 Nylock Nuts (#9). Three on each side. (See Figure 8.)

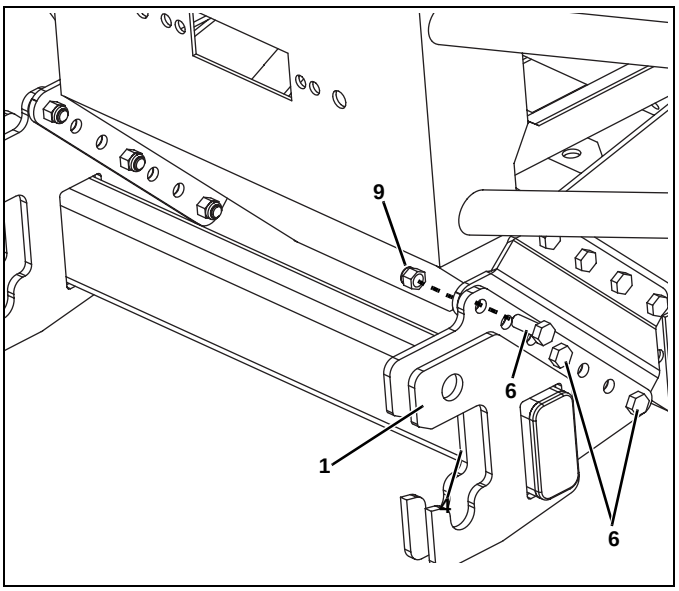

Figure 8

14. Position the UTV Mount (#1) so that the center of the lower pin slot is 11 to 12 inches off the ground. (See Figure 9.)

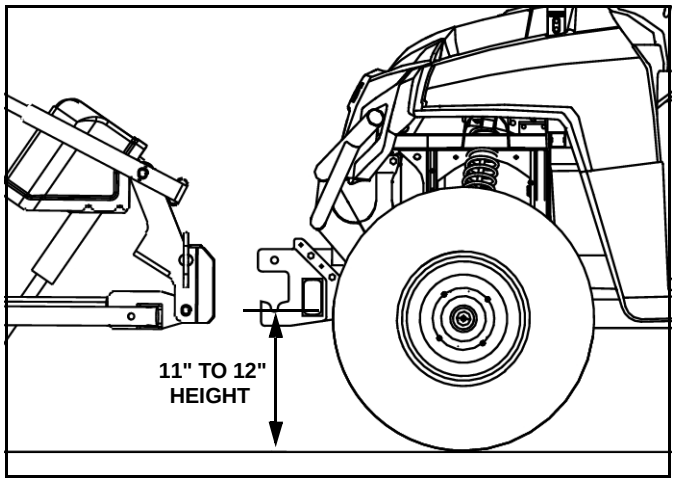

Figure 9

15. Tighten all the hardware using the Torque Specification Chart below, starting with the brush guard hardware first.

TORQUE SPECIFICATIONS FOR STANDARD MACHINE HARDWARE

Bolt Size	GR.2 Dry	GR.5 Dry	GR.8 Dry	Metric Size	GR.8.8 Dry
1/4"	66*	9	12	M8	17
5/16"	11	17	25	M10	35
3/8"	20	30	45	M12	60
7/16"	32	50	70	M14	95
1/2"	50	75	110	M16	155
9/16"	70	110	150		
5/8"	100	150	220		
3/4"	175	260	380		
7/8"	170	430	600		
1"	250	640	900		

These torque values are to be used for all hardware.
Unless otherwise specified, all torque values must meet this specification.
All torque values are in Ft.-Lbs unless otherwise stated
***In-Lbs**

REMEMBER After 5 to 10 hours of snowplow usage, re-torque all hardware!

PARTS LIST

Note: It is recommended that LOCTITE®, or similar thread locking product, be used on ALL mounting hardware (i.e. Nuts, Cap Screws, Bolts, etc.).

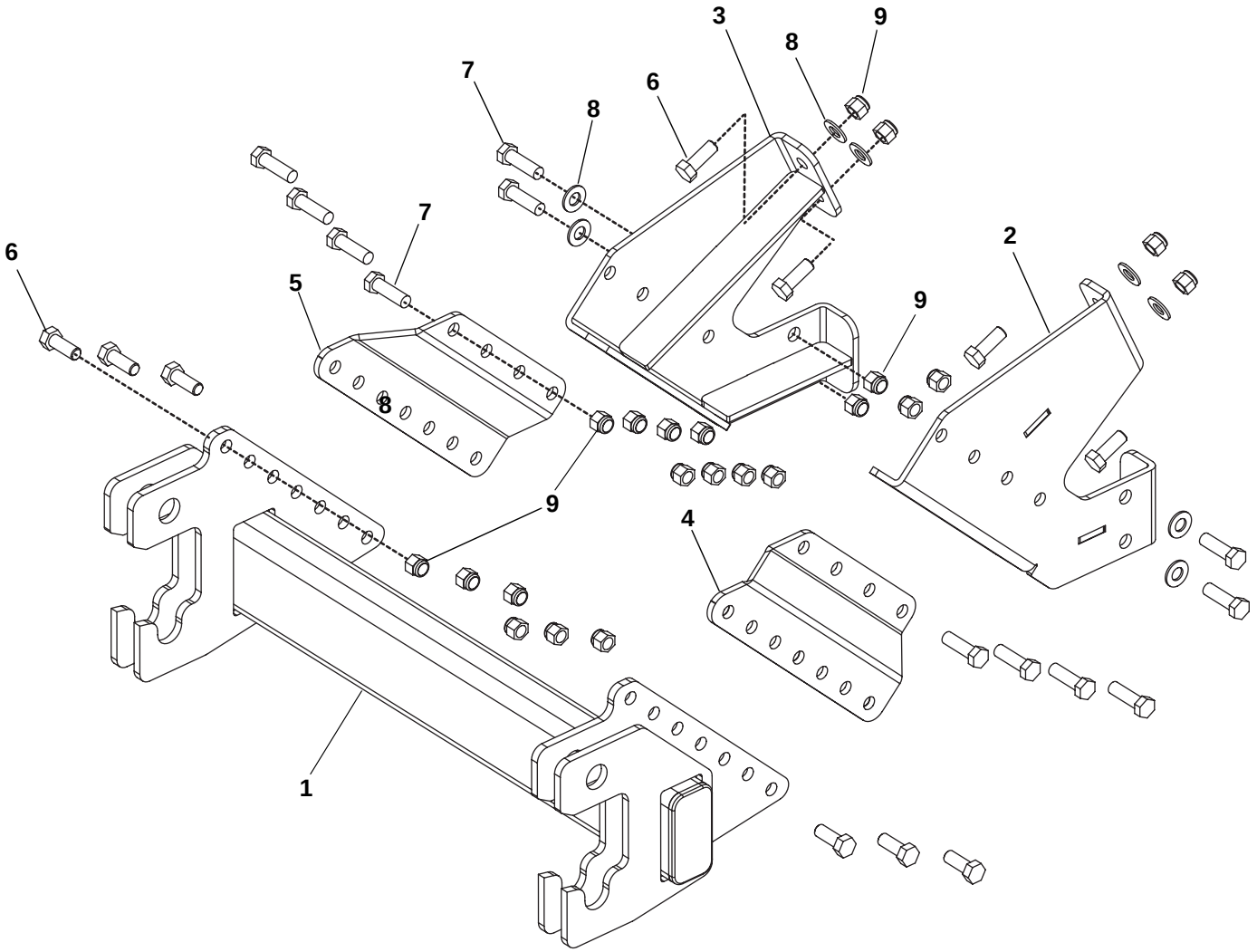

ITEM	PART NO.	DESCRIPTION	QTY.
1		UTV Mount	1
2		Weldment, Bracing, DS	1
3		Weldment, Bracing, PS	1
4		Bracket, Mounting, DS	1
5		Bracket, Mounting, PS	1
6		HHCS, 3/8"-16 x 1"	10
7		HHCS, 3/8"-16 x 1-1/4"	12
8		Washer, Flat, 3/8"	8
9		LN, 3/8"-16	22
10	96116295	Kit, HDWE (Not Shown) (Includes Items 6-9)	1

NOTES

NOTES

SNO-WAY® INTERNATIONAL, INC.

SNO-WAY®
SNOW & ICE CONTROL EQUIPMENT

Hartford, WI 53027 USA
Website: www.snoway.com
©2016 Sno-Way® International