SNO-WAY®

SNOW & ICE CONTROL EQUIPMENT

ASSEMBLY & INSTALLATION INSTRUCTIONS

SUBFRAME 99100936
FOR 22 PLOW SERIES ONLY
(Includes Vehicle Center Member)

TO FIT
2007-2018 JEEP WRANGLER JK (4X4)

Sno-Way®, Down Pressure® and EIS® are registered trademarks of Sno-Way International, Inc. ProControl™, MegaBlade™, V-Wing™, E-Z Switch™, Revolution™, MaxAdjust™, SpeedLock™, and QuickJack™ are trademarks of Sno-Way International, Inc.

©2018 Sno-Way® International

97101329E

1. THINK SAFETY, ALWAYS WEAR SAFETY GLASSES WHEN PERFORMING THE OPERATIONS PRESCRIBED IN THESE INSTRUCTIONS

2. READ ALL INSTRUCTIONS CAREFULLY BEFORE ATTEMPTING INSTALLATION

3. BEFORE BEGINNING WORK MAKE SURE TO SET PARKING BRAKE AND CHOCK WHEELS

MINIMUM VEHICLE RECOMMENDATIONS

Heavy Duty Alternator
Heavy Duty Battery
Manufacturers Snowplow Package

NOTE: On some vehicles it may be necessary to use a form of load booster to decrease the vehicle's front suspension sag with the snow plow in place. This can be accomplished with the use of supplementary air bags, booster springs, or similar load boosting devices. Since there are different load boosting devices available, it will up to the customer/end user to decide and purchase the product to suit the application, and not the responsibility of Sno-Way International,

ASSEMBLY TOOLS NEEDED

Drill Bits	17/32"
Impact Sockets	7/16" – 1-3/8"
	10mm – 18mm
Wrenches	7/16" – 1-3/8"
	10mm – 18mm
Torque Wrench	
Rat Tail Pry Bar	
Cut Off Wheel	

INSTALLATION NOTES

1. **Unless otherwise specified, mount all Vehicle Mount Kit Components to vehicle before tightening any hardware.**
2. **It is recommended that LOCTITE®, or similar thread locking product, be used on ALL mounting hardware (i.e. Nuts, Cap Screws, Bolts, etc.).**
3. Vehicle should be parked on a level surface with a normal vehicle load on the FRONT suspension.
4. Items in parentheses () refer to quantity required for this step. Items in parentheses with a pound sign (#) indicate the part number as found in the parts list on the last page of this document.
   Example: (10) Washer, Lock, 1/2" (#8).
5. It maybe necessary to relocate license plate holder. Check state and local laws for placement, if needed.

MOUNTING INSTRUCTIONS

1. Remove the air dam and the bumper. Retain all fasteners for later reinstallation.
2. **For 2010 and later models only:** Using a cut off wheel, grind flange flush to blocker beam as shown in Figure 1, 2, and 3. Approximately 1/2" of material will be removed. Dress the area that was cut to remove any sharp edges.

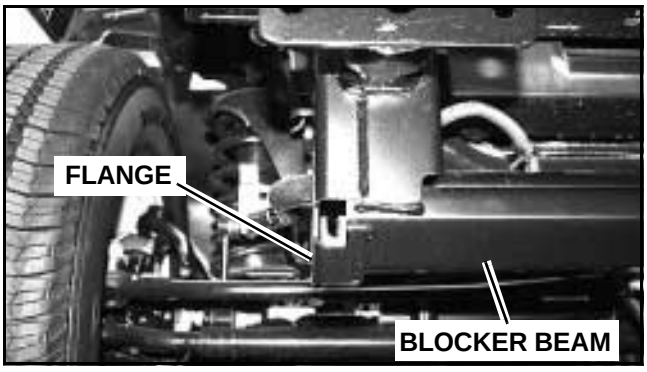

Figure 1

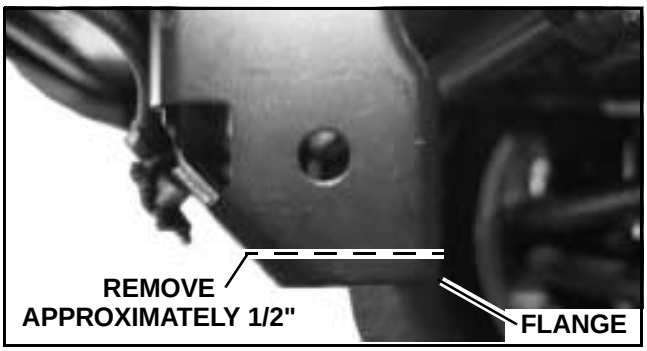

Figure 2

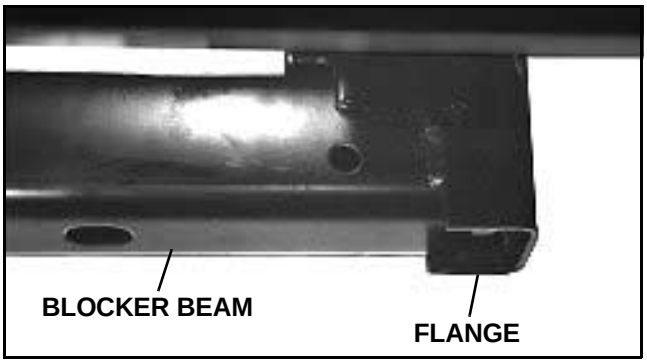

Figure 3

3. Remove the hardware that holds the sway bar to the vehicle and retain the hardware to reinstall the brackets in a later step.
4. Install (1) Side Weldment, LH (#2). Insert the end of the blocker beam through the large square cut in the Side Weldment, LH. Align the slot in the Side Weldment with the bottom hole in the blocker beam brackets. Insert (1) Handle Bolt 1/2" x 1-1/4" x 6" (#4) and (1) 1/2" Flat Washer (#7) into the truck frame through the holes. Attach with (1) 1/2" Flat Washer (#7) and (1) 1/2" Nylock Nut (#9) and finger tighten.

5. Insert (2) 1/2”-13 x 1-1/2” Cap Screws (#6) with (2) 1/2” Flat Washers (#7) into frames blocker beam and though the slots in the horizontal piece on the Side Weldment. Attach using (2) 1/2” Flat Washers (#7) and (2) 1/2” Nylock Nuts (#9) and finger tighten.
6. Repeat steps 3 and 4 to install (1) Side Weldment, RH (#3).
7. Reinstall the sway bar using the existing hardware, ensuring that the horizontal plate that runs along the under side of the frame rail is sandwiched between the bottom of the frame and the sway bar brackets.

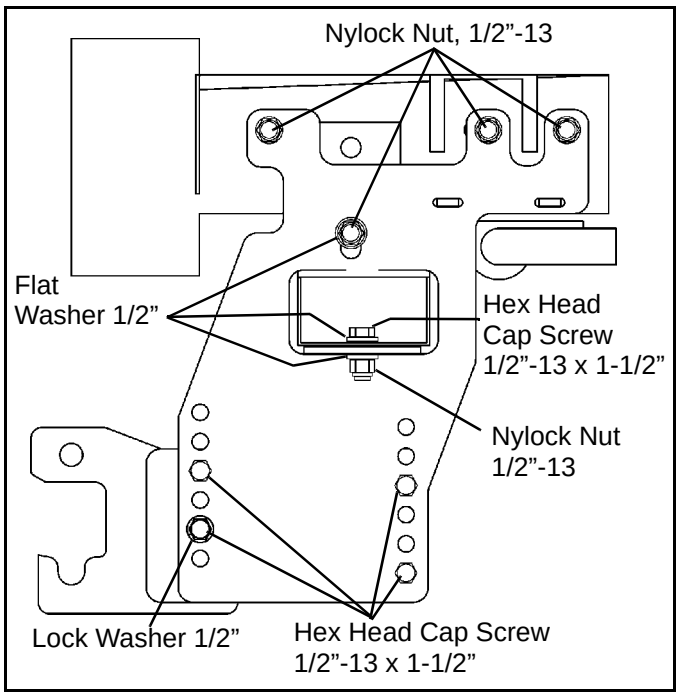

Figure 4

8. Using the 3 holes in the Side Weldments as guides, drill (6) 17/32” holes through the outside of the frame rails. For the 4 rear holes insert (4) 2 per side 1/2”-13 x 2” x 16” Handle Bolts (#5) into the front of the frame rail with (4) 1/2” Flat Washers (#7) on each handle bolt. Attach using (4) 1/2” Nylock Nuts (#9) and finger tighten. In the front hole on both the Side Weldments, LH and RH secure using (1) each per side 1/2”-13 x 2” Cap Screws (#10), 1/2” Flat Washers (#7) and 1/2” Nylock Nuts (#9) and finger tighten.
9. Position the Vehicle Center Member (#1) between the Front Mtg Weldments (#2 and #3) to allow for an 8" to 10" height between the VCM and the ground.

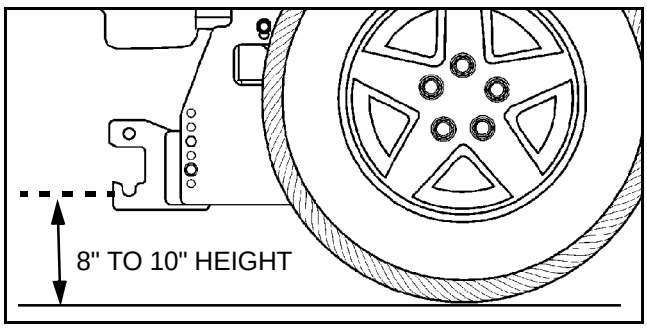

Figure 5

IMPORTANT: Height from the center of the lower Plow Mounting slots on the Vehicle Center Member to the ground should be between 8" and 10" to ensure proper operation.

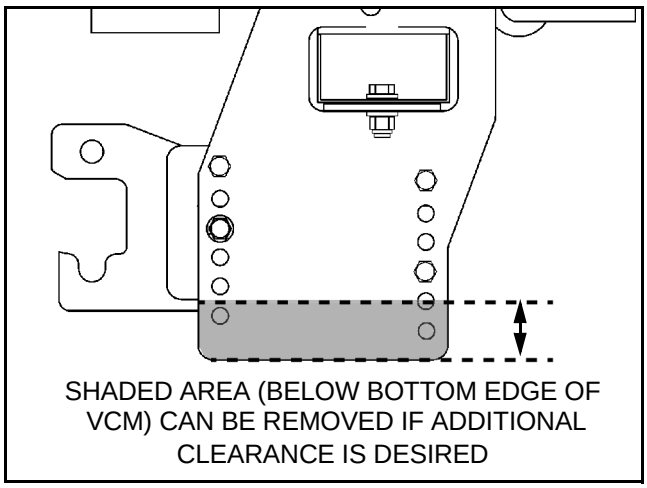

Figure 6

NOTE: Due to the various combinations of tires sizes and suspension components used on these vehicles, the Side Weldments (#2 & #3) have been manufactured to handle a wide range of vehicle ride heights. If the Vehicle Center Member is mounted similar to Figure 6 to achieve the required 8" to 10" clearance, the shaded portion of both Side Weldments (below the bottom edges of the Vehicle Center Member) can be cut off and the exposed metal dressed with touch-up paint.

10. Secure the Vehicle Center Member using (8) 1/2”-13 x 1-1/2” Caps Screws (#6), (2) 1/2” Lock Washers (#8) where indicated and (6) 1/2” Nylock Nuts (#9) (See Figure 4).
11. Tighten all hardware using the torque specification chart provided.
12. Reinstall the bumper using the original hardware. Air dam can be reinstalled, but there are major modifications needed, so up to installer to decide if modifications are warranted or wanted.

TORQUE SPECIFICATIONS FOR STANDARD MACHINE HARDWARE

Bolt Size	GR.2 Dry	GR.5 Dry	GR.8 Dry	Metric Size	GR.8.8 Dry
1/4"	66*	9	12	M8	17
5/16"	11	17	25	M10	35
3/8"	20	30	45	M12	60
7/16"	32	50	70	M14	95
1/2"	50	75	110	M16	155
9/16"	70	110	150		
5/8"	100	150	220		
3/4"	175	260	380		
7/8"	170	430	600		
1"	250	640	900		

Note: These torque values are to be used for all hardware. Unless otherwise specified, all torque values must meet this specification.
Note: All torque values are in Ft.-Lbs unless otherwise stated
Note: *In-Lbs

REMEMBER ***After 5 to 10 hours of snowplow usage, re-torque all Cap Screws!***

PARTS LIST

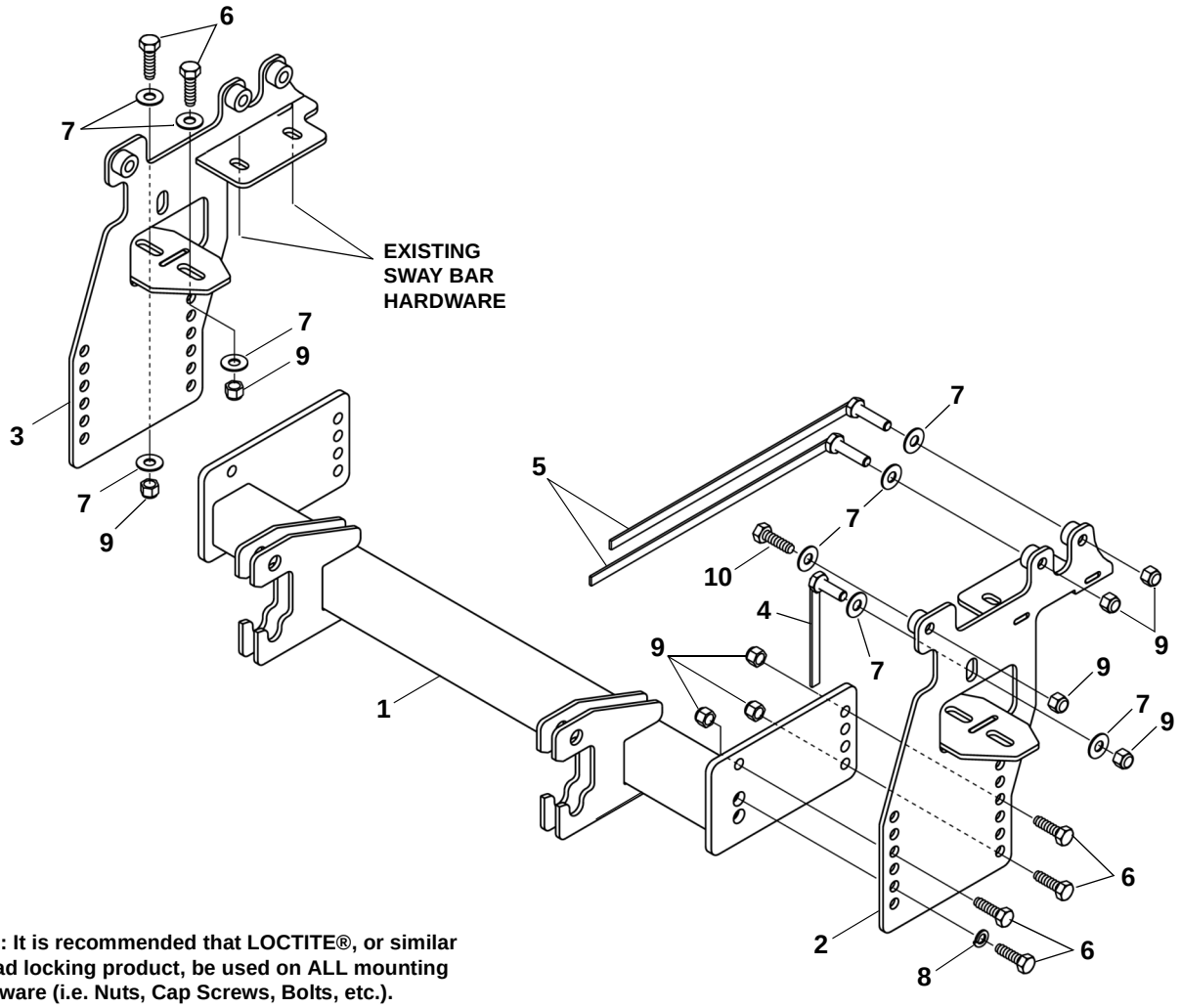

Note: It is recommended that LOCTITE®, or similar thread locking product, be used on ALL mounting hardware (i.e. Nuts, Cap Screws, Bolts, etc.).

ITEM	PART NO.	DESCRIPTION	QTY.
1		Vehicle Center Member	1
2		Side Weldment, LH	1
3		Side Weldment, RH	1
4		Handle Bolt, 1/2”-13 x 1-1/4” x 6”	2
5		Handle Bolt, 1/2”-13 x 2” x 16”	4
6		Cap Screw, Hex Head, 1/2”-13 x 1-1/2”	12
7		Washer, Flat, 1/2”	18
8		Washer, Lock, 1/2”	2
9		Nut, Nylock, 1/2”-13	18
10		Cap Screw, Hex Head, 1/2”-13 x 2”	2
11	96110299	Kit, HDWE (Includes Items 6-10) (Not Shown)	1

©2018 Sno-Way® International