SNO-WAY®

SNOW & ICE CONTROL EQUIPMENT

SERVICE PARTS MANUAL

29VHDSKD SERIES
SKID STEER SNOW PLOW

WITH SERIAL NUMBERS AFTER
29VSKD200000

Sno-Way®, Down Pressure® and EIS® are registered trademarks of Sno-Way International, Inc.
ProControl™, V-Wing™, Revolution™ and MaxAdjust™ are trademarks of Sno-Way International, Inc.

©2017 Sno-Way® International

97101981A

TABLE OF CONTENTS

Page

PARTS LIST INTRODUCTION 2
USING THIS PARTS LIST 2
PART DESCRIPTION ABBREVIATIONS 2
FRAME ASSEMBLY 3
V-WING™ BLADE 5
HYDRAULIC SYSTEM 6
HYDRAULIC VALVE BLOCK ASSEMBLY 7
CONTROL SYSTEM WIRING 8
NUMERICAL INDEX 9

PARTS LIST INTRODUCTION

Our dealership network stands by to provide you with any assistance you may require, including genuine Sno-Way service parts. All parts should be obtained from or ordered through your dealer. Give complete information about the part(s) at time of order, and include the Model and applicable Serial Numbers of your machine.

NOTE: The Model and all Serial number information should be recorded on page two of your Installation and Owner's Manual for ease of reference. The location of these numbers on the machine is detailed in the manual as well.
"Right" and "Left" are determined from a position sitting on the Operators seat of the vehicle.

We reserve the right to make changes or improvements in the design or construction of any part without incurring the obligation to install such changes in any unit previously delivered.

USING THIS PARTS LIST

A sample parts listing is shown below:

- The "**ITEM**" in column one is the number used in the corresponding illustration.
- The "**PART NO.**" in column two is the number used to order replacement parts. If a number does not appear in the column the part is only available by ordering the complete assembly.
- The **"DESCRIPTION"** in column three is the name of the replacement part. At times the name may be indented, this means that the indented parts are part of the preceding assembly.
- The **"QTY."** in column four is the quantity needed to service the assembly illustrated, not the complete product.

ITEM	PART NO.	DESCRIPTION	QTY.
1	96100083	O-ring	1
2	96001529	Elbow	3
3	98100036	Capscrew, Hex.,3/8"-16NC x 7/8"	9

PART DESCRIPTION ABBREVIATIONS

Our Part Descriptions use common industry standard abbreviations in the naming conventions for many individual items. The list below details the abbreviations commonly used throughout this manual. If a specific abbreviation is not listed, contact any Sno-Way Dealer for clarification.

ABBREV.	DESCRIPTION
BRKT	Bracket
CB	Carriage Bolt
CLP	Clevis Pin
COTP	Cotter Pin
DP	Down Pressure
DS	Driver Side
EB	Eye Bolt
GR	Grade
HDWE	Hardware
HHCS	Hex Head Cap Screw
HN	Hex Nut
HNILN	Hex Nylon Insert Locknut

ABBREV.	DESCRIPTION
HW	Hard Wired
HWH	Hex Washer Head
LN	Lock Nut
LW	Helical Lock Washer
PS	Passenger Side
PW	Plain Flat Washer
SHCS	Socket Head Cap Screw
SLT	Slotted
SS	Stainless Steel
ST	Self-Threading
UB	U-Bolt
WL	Wireless

FRAME ASSEMBLY

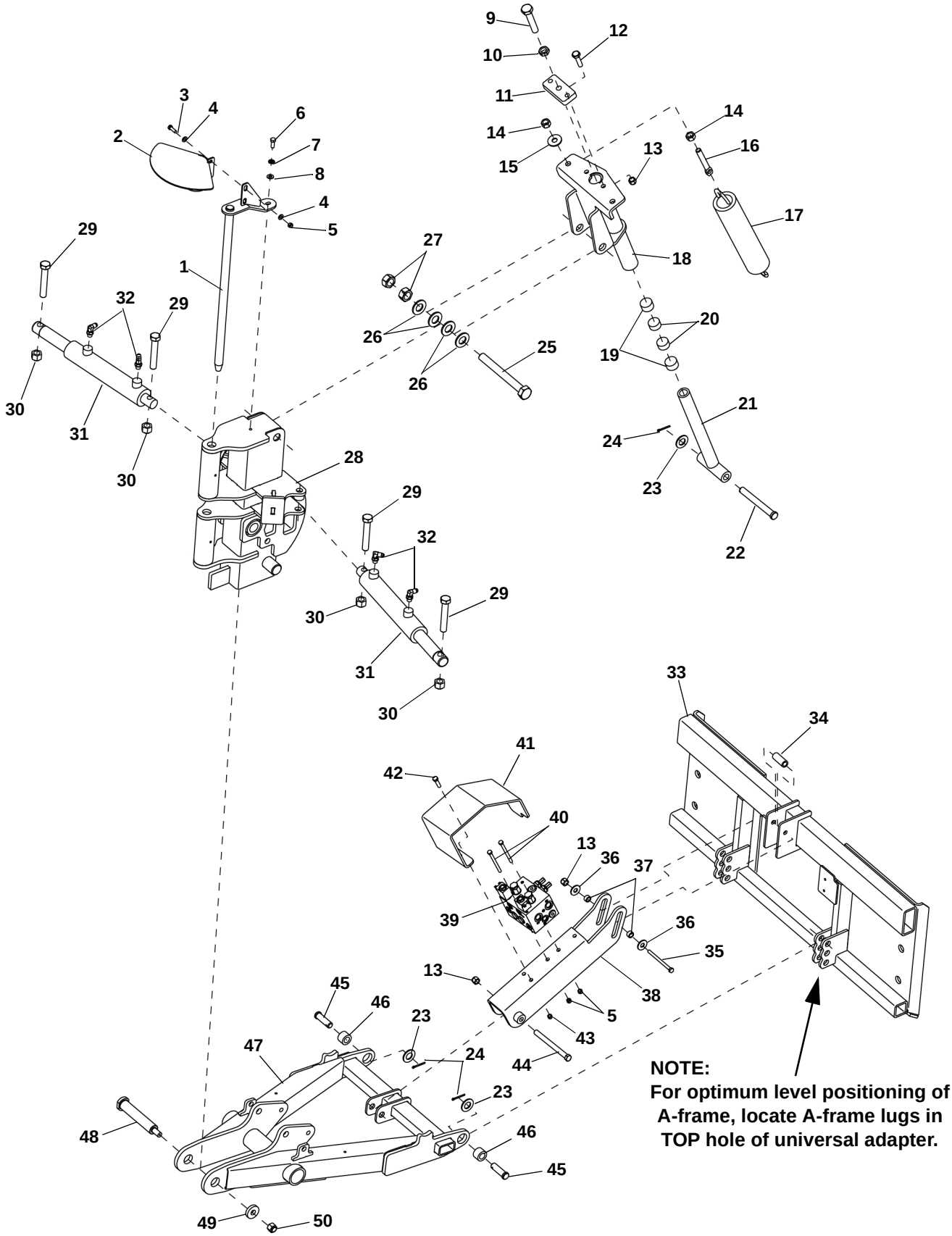

FRAME ASSEMBLY

ITEM	PART NO.	DESCRIPTION	QTY
1	96111951	WELDMENT, PIN, 29V	1
2	96112220	WELDMENT, CENTER DEFLECTOR	1
3	98009149	HHCS, 5/16"-18 X 1.0" GR. 8, ZP/DT	2
4	98009024	PW, 5/16" HARD, ZINC	4
5	98009150	LN, 5/16"-18,NYLON INSERT, ZP/DT	4
6	98009022	HHCS, 3/8"-16 X 1", GR. 5, ZINC	1
7	98009008	LW, 3/8", MED. SPLIT, ZP/DT	1
8	98009032	PW, 3/8" A NARROW, ZP/DT	1
9	98100455	TAP BOLT, 3/4"-10 X 4", UNC, FULL THREAD, ZP/DT	1
10	98100473	HN, 3/4"-10, JAM, ZP/DT	1
11	96112894	PLATE, ADJUSTMENT	1
12	98100010	HHCS. 1/2"-13 X 2", GR 5, ZP/DT	2
13	98009013	LN, 1/2"-13, NYLON INSERT, ZP/DT	4
14	98009078	HN, 5/8"-11, ZINC	4
15	98009039	PW, 5/8" TYPE B REGULAR	2
16	96102781	BOLT, SPADE, 5/8"-11 X 5", ZP/DT	2
17	96112891	SPRING, TRIP, 29V	2
18		WELDMENT, SPRING HOLDER, TOP	1
19	96114392	PLATE, STOP	2
20	96111065	STOP	2
21		WELDMENT, SPRING HOLDER, BOTTOM	1
22	98100499	CLP., 3/4" X 6.5", GR 5, YLLW ZNC	1
23	98009030	PW, 3/4" A NARROW, ZP/DT	2
24	98009085	COTP, 5/32" X 1-1/2", ZP	3
25	98100510	HHCS, 1"-8 X 8"	1
26	98009005	PW, 1", A NARROW, ZP/DT	4
27	98100511	HN, 1"-8, NYLON INSERT	1
28		TUBE TOWER	1
29	98009084	HHCS, 3/4"-10 X 4-1/2", GR 8, ZP/DT	4
30	98009003	LN, 3/4"-10, NYLON INSERT, ZP/DT	4
31	96111453	CYLINDER, SWING, DA 2" X 9-1/2", 29V	2
32	96100001	FITTING, ELBOW 90°	4
33	96109850	UNIVERSAL ADAPTER, VSKD	1
34	96116541	BUSHING, ADAPTER, VSKD	1
35	98109043	HHCS, 1/2"-13 X 5", GR 8, ZP/DT	1
36	98100176	PW, 1/2", A WIDE, HARDENED, ZP/DT	2
37	96114794	BUSHING, LINK, 29VSKD	2
38	96114715	BRKT, LINK, VSKD	1
39		VALVE BLOCK ASSY, 29 VSKD (See page 7 for components)	1
40	98100568	HHCS, 5/16"-18 X 4.5", GR 5	2
41	96115594	BRKT, COVER, 29 VSKD	1
42	98009256	HHCS, 3/8"-16 X 1-1/2"	2
43	98009009	LN, 3/8"-16, NYLON INSERT, ZINC	2
44	98009040	HHCS, 1/2"-13 X 7"	1
45	98100165	CLP, 3/4" X 2-1/2", GR 5	2
46	96114716	BUSHING, A_FRAME 29VSKD	2
47		A-FRAME, 29V	1
48	96112733	PIN, TOWER PIVOT	1
49	98100469	WASHER, SPECIAL, 29V	1
50	98009038	LN, 5/8"-11, NYLON INSERT, ZP/DT	1

NOTE: Reference "PART DESCRIPTION ABBREVIATIONS" on page 2 for a list of abbreviations used in the descriptions in this manual.

V-WING™ BLADE

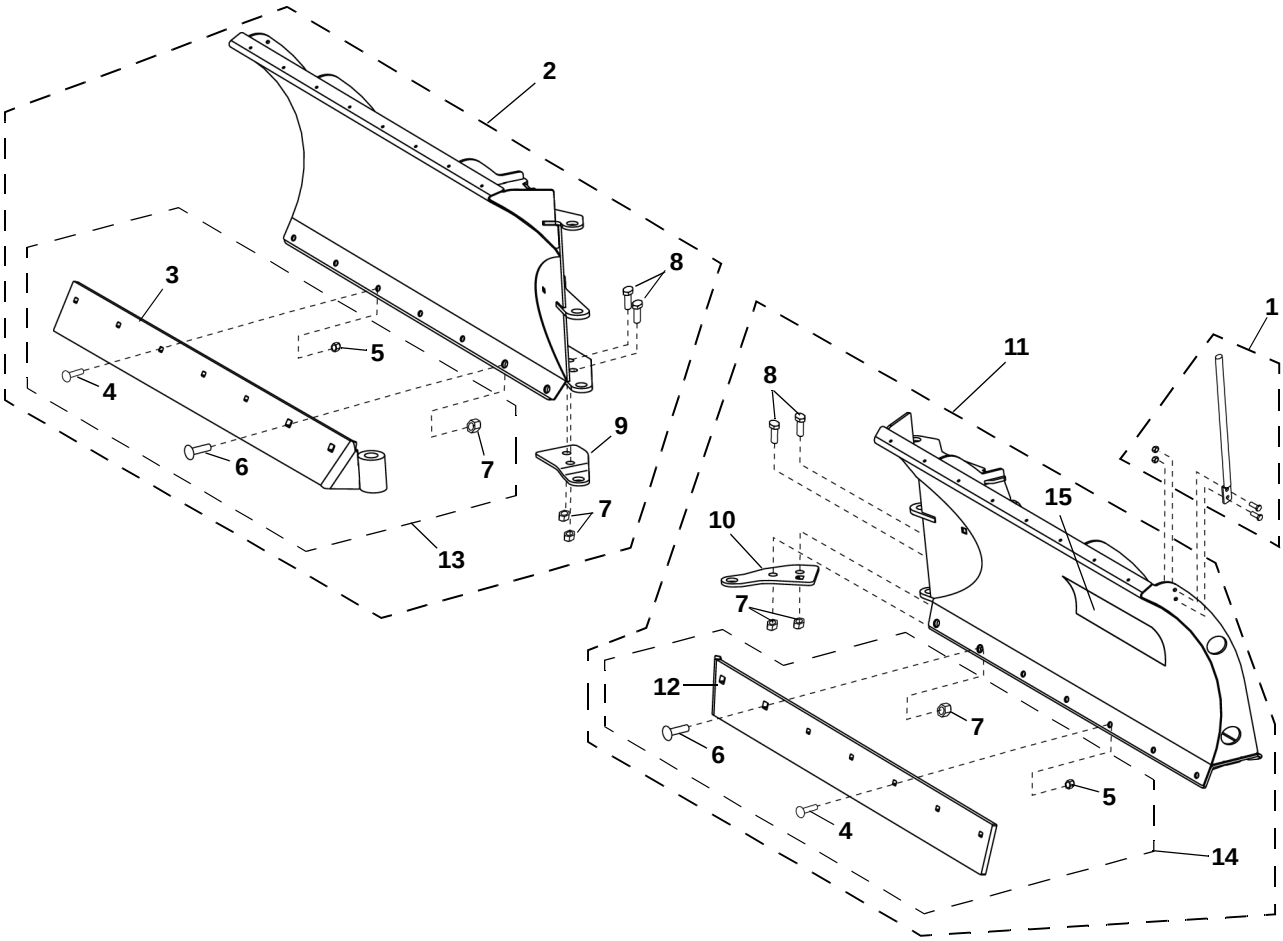

ITEM	PART NO.	DESCRIPTION	QTY
1	96112352	KIT, BLADE GUIDE-YELLOW	2
		HHCS, 5/16"-18 X1" SS (INCLUDED WITH ITEM #1)	4
		LN, 5/16"-18, SS (INCLUDED WITH ITEM #1)	4
2	96113820	PKG WING 29VHD, PS	1
3		WEARSTRIP, 29VHD, PS	1
4	98100481	CB, 1/2"-13 X 1-3/4"	10
5	98009013	LN, 1/2-13, NYLON INSERT	10
6	98100482	CB, 3/4"-10 X 2"	4
7	98009003	LN, 3/4"-10, NYLON INSERT	8
8	98009001	HHCS, 3/4"-10 X 2.50"	4
9	96113365	SUPPORT PLATE, LOWER HINGE, PS	1
10	96113364	SUPPORT PLATE, LOWER HINGE, DS	1
11	96113818	PKG WING 29VHD, DS (INCLUDES ITEM 15)	1
12		WEARSTRIP, 29VHD, DS	1
13	96113318	WEARSTRIP KIT, 29VHD PS (INCLUDES ITEM 3 AND HARDWARE)	1
14	96113319	WEARSTRIP KIT, 29VHD DS (INCLUDES ITEM 12 AND HARDWARE)	1
15	97101835	DECAL, SNOWAY	1

NOTE: Reference "PART DESCRIPTION ABBREVIATIONS" on page 2 for a list of abbreviations used in the descriptions in this manual.

HYDRAULIC SYSTEM

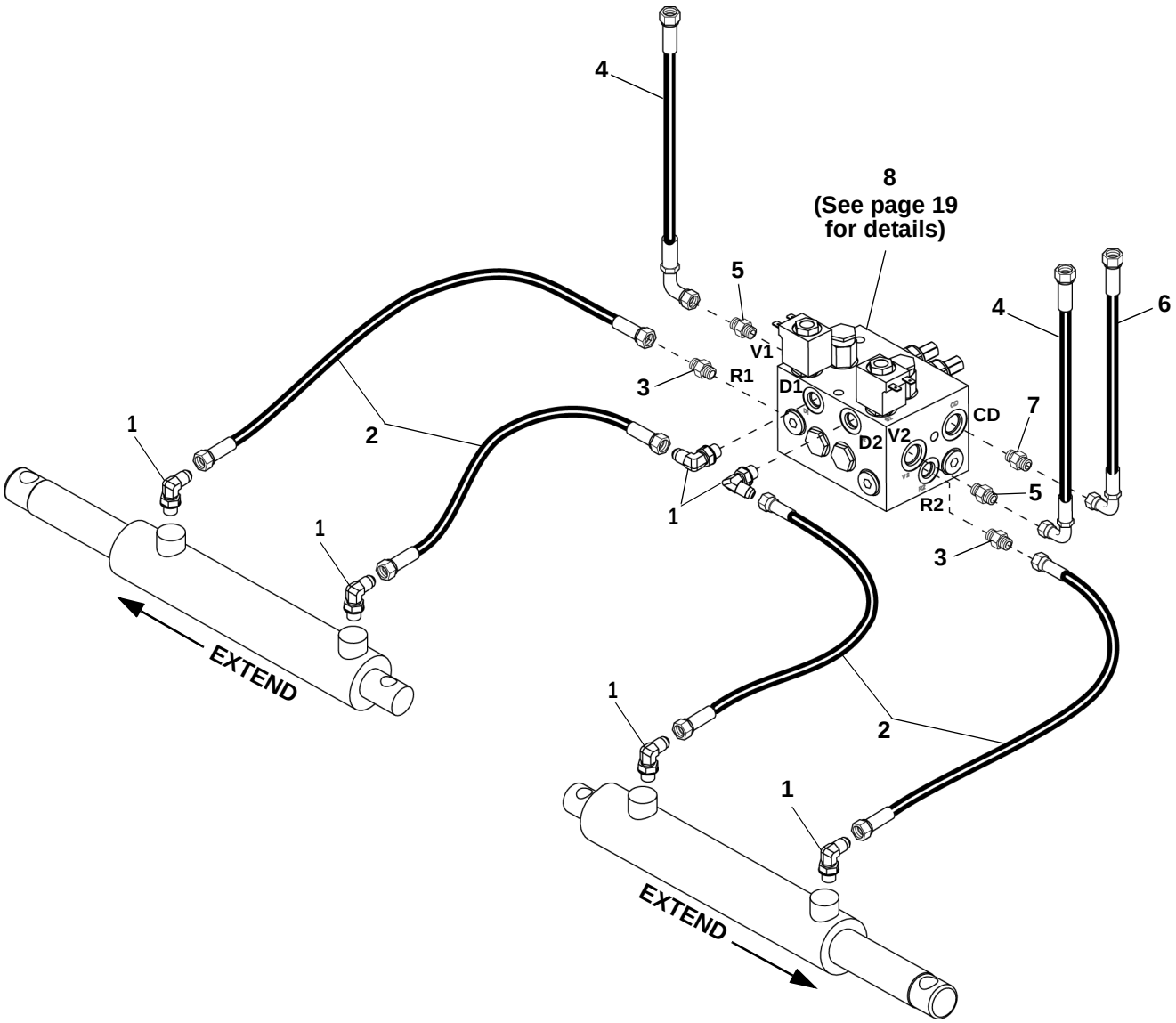

ITEM	PART NO.	DESCRIPTION	QTY
1	96100001	ELBOW, 90 DEG	6
2	96112917	HOSE, HYDRAULIC, 62"	4
3	96100000	FITTING, STRAIGHT	2
4	96105513	HOSE, HYDRAULIC, 69"	2
5	96107721	FITTING, #8 SAE to #10 JIC	2
6	96115593	HOSE, HYDRAULIC, 69"	1
7	96115596	FITTING, #8 SAE to #8 JIC	1
8		ASSEMBLY, VALVE, 12 VDC (See page 7 for components)	1

NOTE: Reference "PART DESCRIPTION ABBREVIATIONS" on page 2 for a list of abbreviations used in the descriptions in this manual.

HYDRAULIC VALVE BLOCK ASSEMBLY

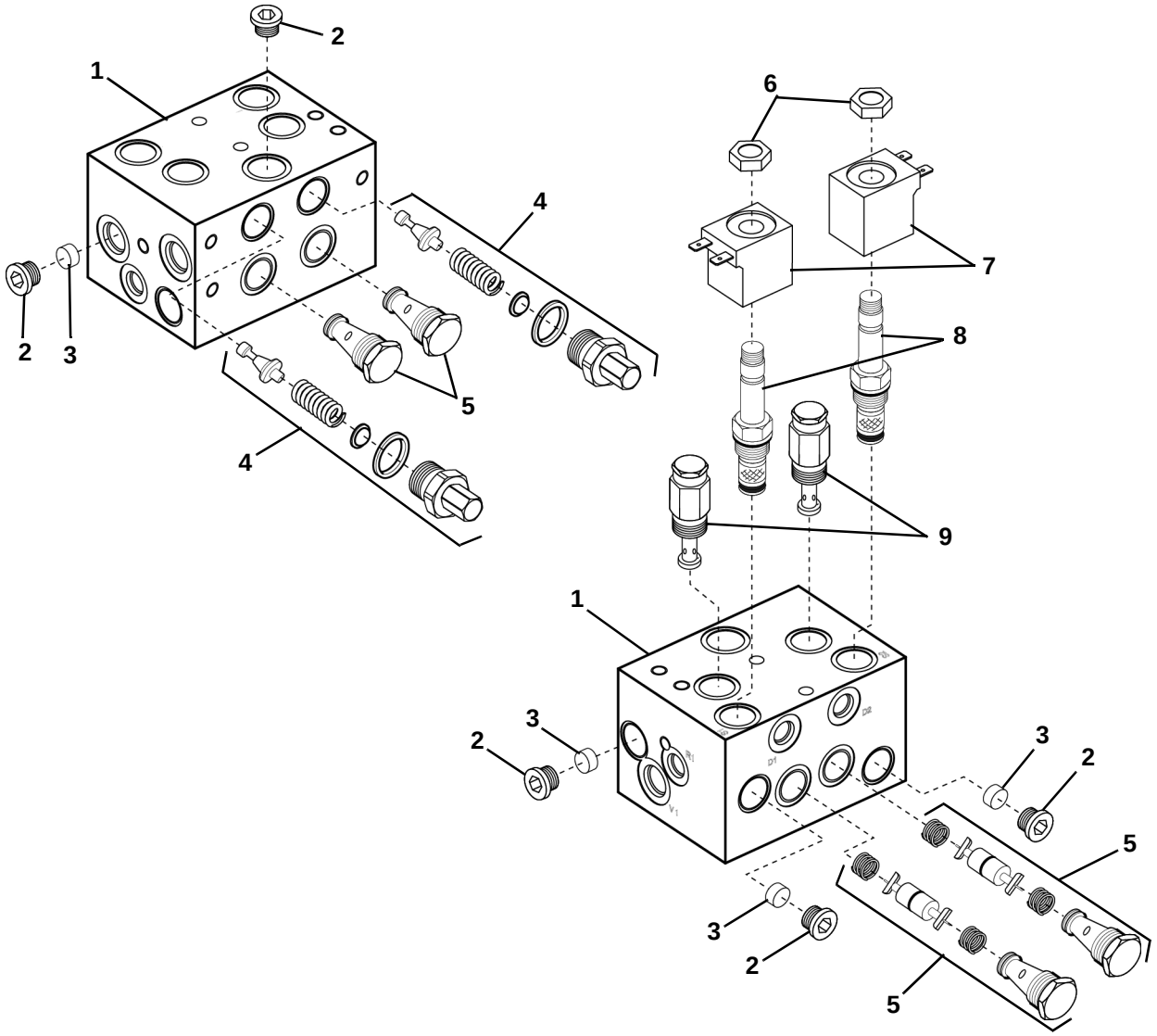

ITEM	PART NO.	DESCRIPTION	QTY
1		HOUSING, VALVE BLOCK	1
2		PLUG, SAE O-RING, 3/4"-16	5
3	96115598	VALVE, POPPET, PRESSURE COMPENSATED, FLOW, 3 GPM	4
4	96114439	VALVE, RELIEF, GREEN SPRING, WING (3000 PSI)	2
5	96112948	KIT, CHECK VALVE, 65 PSI (INCLUDES 2 CARTRIDGE CHECK VALVES, 1 PISTON & 2 SPRINGS	2
6	96105275	NUT, COIL, PARKER	2
7	96111171	COIL, BLACK	2
8	96115597	CARTRIDGE, #8, 2W/2, NORMALLY OPENED	2
9	96112553	VALVE, RELIEF CARTRIDGE #8, 2600 PSI	2

NOTE: Reference "PART DESCRIPTION ABBREVIATIONS" on page 2 for a list of abbreviations used in the descriptions in this manual.

CONTROL SYSTEM WIRING

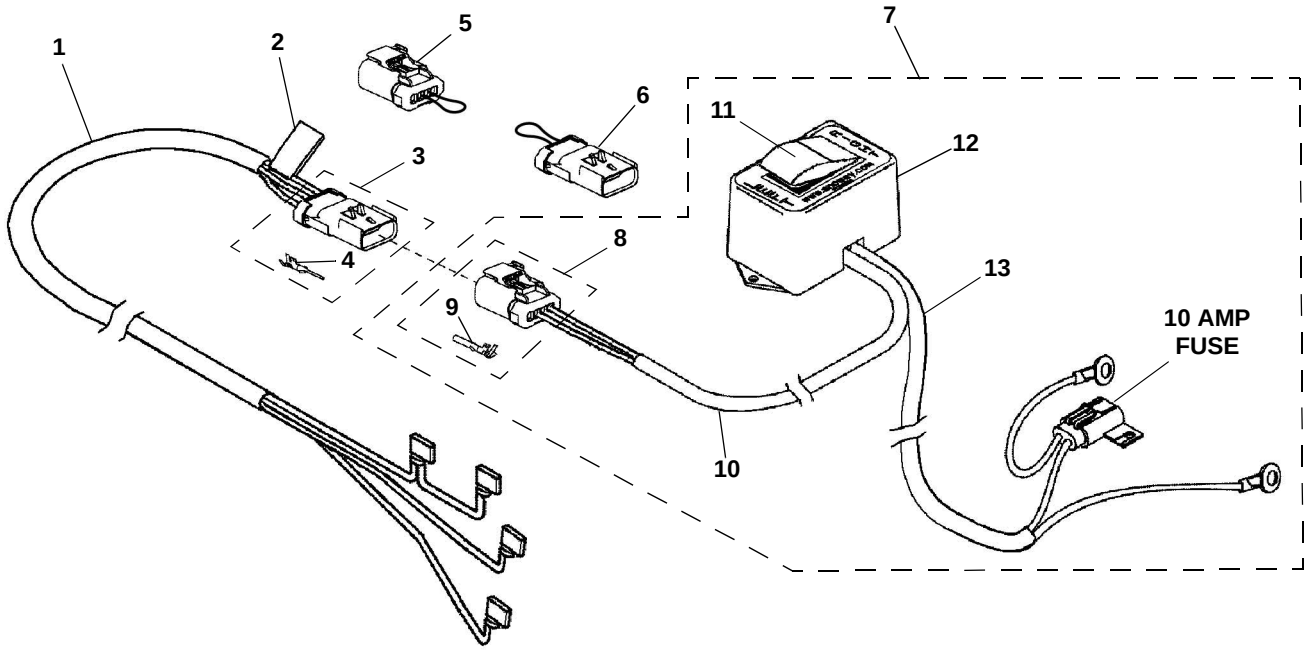

ITEM	PART NO.	DESCRIPTION	QTY
1	96115684	HARNESS, MAIN VSKD SSA	1
2		DECAL, WARNING	1
3	96112301	CONNECTOR, PACKARD, MALE	1
4	96108661	TERMINAL, MALE	1
5	96112871	STORAGE PLUG, FEMALE	1
6	96112872	STORAGE PLUG, MALE	1
7	96115688	ASSY., V-PLOW CONTROL	1
8	96112300	CONNECTOR, PACKARD, FEMALE	2
9	96108662	TERMINAL, FEMALE	2
10	96115685	HARNESS, CONTROL	1
11	96107113	SWITCH, ON/OFF	1
12	96105873	CONTROL BOX, ON/OFF	1
13	96107693	HARNESS, POWER CABLE	1

NOTE: Reference "PART DESCRIPTION ABBREVIATIONS" on page 2 for a list of abbreviations used in the descriptions in this manual.

NUMERICAL INDEX

PART NO.	PAGE	ITEM
96100000	6	3
96100001	4	32
,	6	1
96102781	4	16
96105275	7	6
96105513	6	4
96105873	8	12
96107113	8	11
96107693	8	13
96107721	6	5
96108661	8	4
96108662	8	9
96109850	4	33
96111065	4	20
96111171	7	7
96111453	4	31
96111951	4	1
96112220	4	2
96112300	8	8
96112301	8	3
96112352	5	1
96112553	7	9
96112733	4	48
96112871	8	5
96112872	8	6
96112891	4	17
96112894	4	11
96112917	6	2
96112948	7	5
96113318	5	13
96113319	5	14
96113364	5	10
96113365	5	9
96113818	5	11
96113820	5	2
96114392	4	19
96114439	7	4
96114715	4	38

PART NO.	PAGE	ITEM
96114716	4	46
96114794	4	37
96115593	6	6
96115594	4	41
96115596	6	7
96115597	7	8
96115598	7	3
96115684	8	1
96115685	8	10
96115688	8	7
96116541	4	34
97101835	5	15
98009001	5	8
98009003	4	30
	5	7
98009005	4	26
98009008	4	7
98009009	4	43
98009013	4	13
	5	5
98009022	4	6
98009024	4	4
98009030	4	23
98009032	4	8
98009038	4	50
98009039	4	15
98009040	4	44
98009078	4	14
98009084	4	29
98009085	4	24
98009149	4	3
98009150	4	5
98009256	4	42
98100010	4	12
98100165	4	45
98100176	4	36
98100455	4	9
98100469	4	49

PART NO.	PAGE	ITEM
98100473	4	10
98100481	5	4
98100482	5	6
98100499	4	22
98100510	4	25
98100511	4	27
98100568	4	40
98109043	4	35

NOTES

SNO-WAY® INTERNATIONAL, INC.

SNO-WAY®
SNOW & ICE CONTROL EQUIPMENT

Hartford, WI 53027 USA
Website: www.snoway.com
©2017 Sno-Way® International